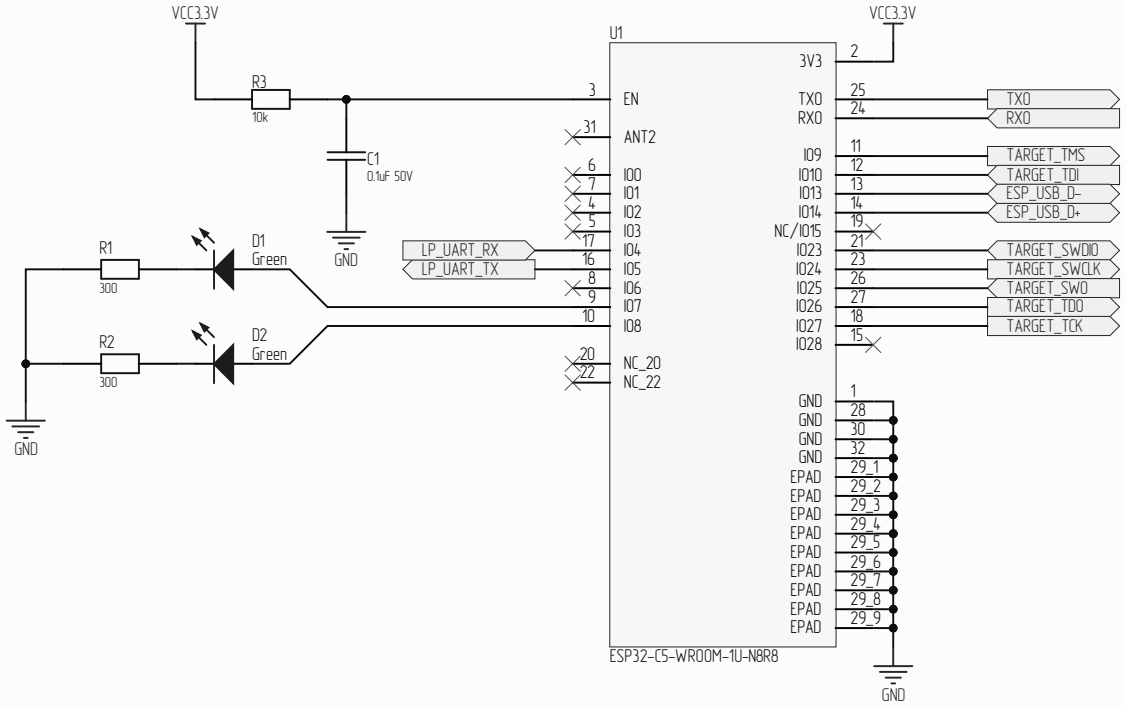
VCC3.3V
R3
10k
C1
0.1uF 50V
GND
R1
300
D1
Green
R2
300
D2
Green
GND
LP_UART_RX
LP_UART_TX
U1
EN
ANT2
IO0
IO1
IO2
IO3
IO4
IO5
IO6
IO7
IO8
NC_20
NC_22
3V3
TXO
RXO
IO9
IO10
IO13
IO14
NC/IO15
IO23
IO24
IO25
IO26
IO27
IO28
GND
EPAD
ESP32-C5-WROOM-1U-N8R8
VCC3.3V
TXO
RXO
TARGET_TMS
TARGET_TDI
ESP_USB_D-
ESP_USB_D+
TARGET_SWDIO
TARGET_SWCLK
TARGET_SWO
TARGET_TDO
TARGET_TCK
GND

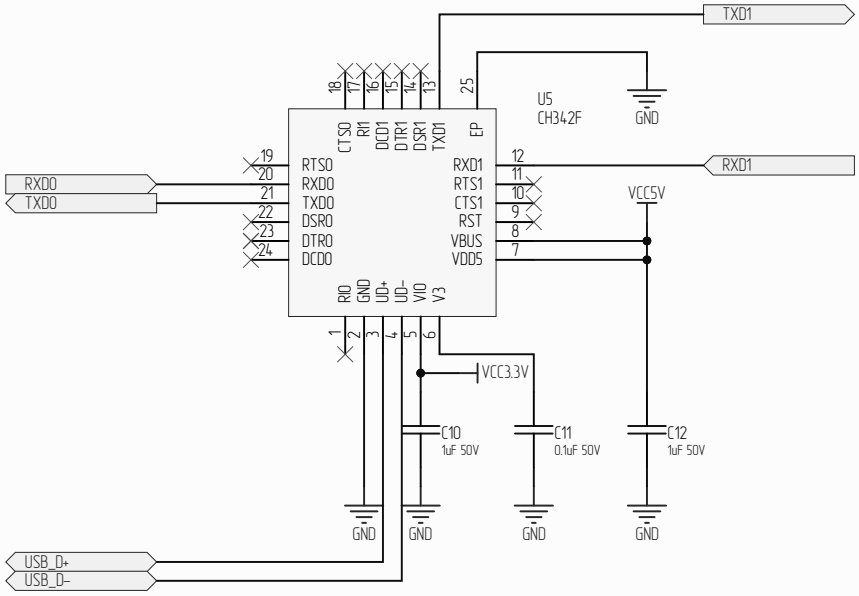
TXD1
U5
CH342F
GND
RXD1
VCC5V
RXD0
TXD0
RTS0
RXD0
TXD0
DSR0
DTR0
DCD0
CTS0
RI1
DCD1
DTR1
DSR1
TXD1
EP
RXD1
RTS1
CTS1
RST
VBUS
VDD5
RI0
GND
UD+
UD-
VIO
V3
VCC3.3V
C10
1uF 50V
C11
0.1uF 50V
C12
1uF 50V
USB_D+
USB_D-

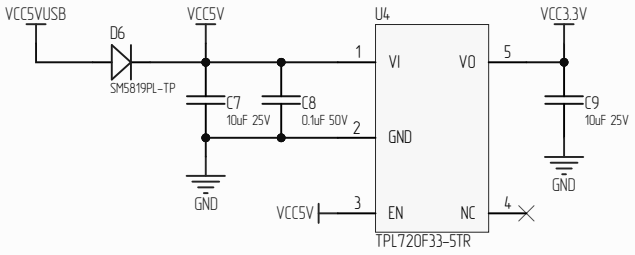
VCC5VUSB
D6
SM5819PL-TP
VCC5V
C7
10uF 25V
C8
0.1uF 50V
GND
U4
1
VI
VO
5
2
GND
VCC5V
3
EN
NC
4
TPL72OF33-5TR
VCC3.3V
C9
10uF 25V
GND

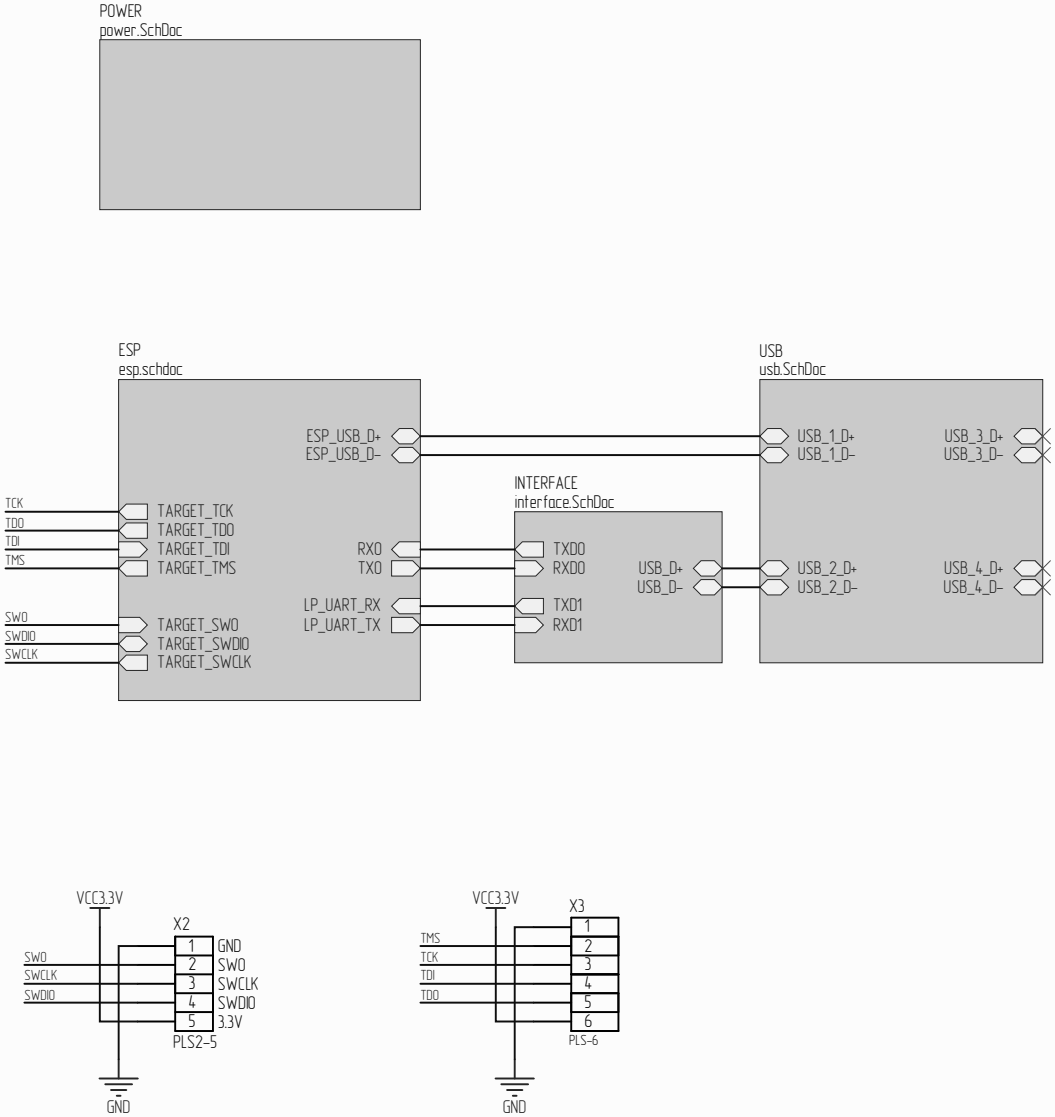
POWER
power.SchDoc
ESP
esp.schdoc
USB
usb.SchDoc
ESP_USB_D+
ESP_USB_D-
USB_1_D+
USB_1_D-
USB_3_D+
USB_3_D-
INTERFACE
interface.SchDoc
TCK
TDO
TDI
TMS
TARGET_TCK
TARGET_TDO
TARGET_TDI
TARGET_TMS
RX0
TX0
TXD0
RXD0
USB_D+
USB_D-
USB_2_D+
USB_2_D-
USB_4_D+
USB_4_D-
LP_UART_RX
LP_UART_TX
TXD1
RXD1
SW0
SWDIO
SWCLK
TARGET_SW0
TARGET_SWDIO
TARGET_SWCLK
VCC3.3V
X2
1 GND
2 SW0
3 SWCLK
4 SWDIO
5 3.3V
PLS2-5
GND
VCC3.3V
X3
TMS
TCK
TDI
TDO
1
2
3
4
5
6
PLS-6
GND

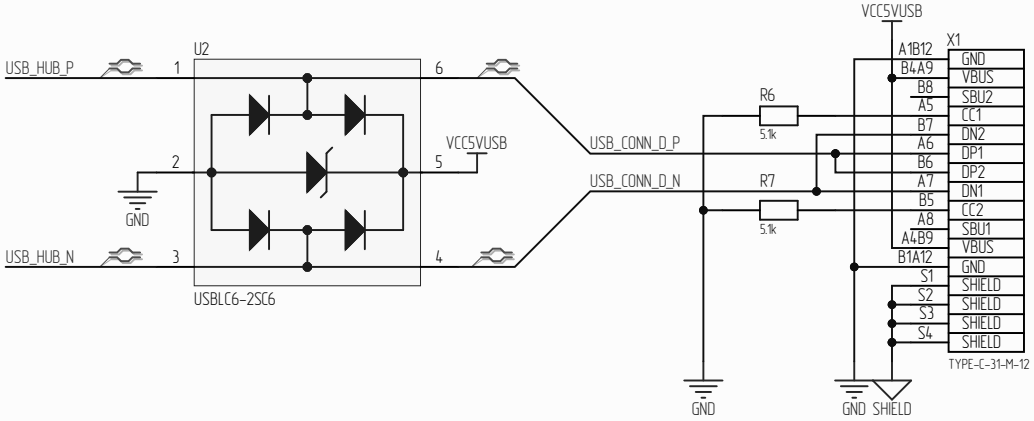
VCC5VUSB
X1
U2
USB_HUB_P
USB_HUB_N
USBLC6-2SC6
GND
VCC5VUSB
USB_CONN_D_P
USB_CONN_D_N
R6
R7
5.1k
A1B12
B4A9
B8
A5
B7
A6
B6
A7
B5
A8
A4B9
B1A12
S1
S2
S3
S4
GND
VBUS
SBU2
CC1
DN2
DP1
DP2
DN1
CC2
SBU1
VBUS
GND
SHIELD
SHIELD
SHIELD
SHIELD
TYPE-C-31-M-12
GND
GND
SHIELD

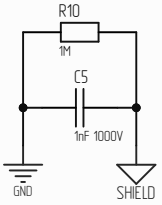
R10
1M
C5
1nF 1000V
GND
SHIELD

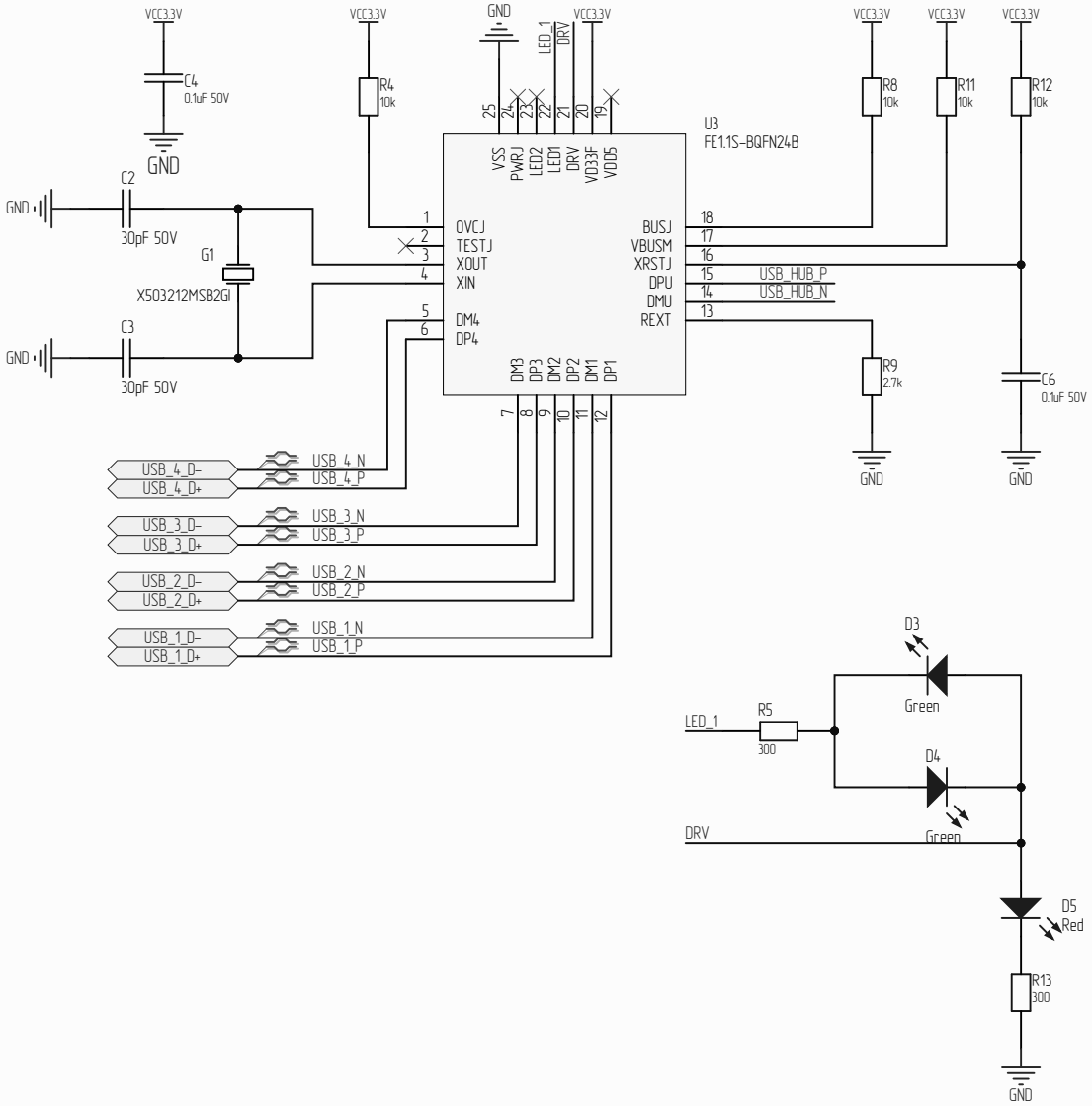
VCC3.3V
C4
0.1uF 50V
GND
VCC3.3V
R4
10k
GND
LED_1
DRV
VCC3.3V
U3
FE1.1S-BQFN24B
VSS
PWRJ
LED2
LED1
DRV
VD33F
VDD5
OVCJ
TESTJ
XOUT
XIN
DM4
DP4
BUSJ
VBUSM
XRSTJ
DPU
DMU
REXT
DM3
DP3
DM2
DP2
DM1
DP1
VCC3.3V
R8
10k
VCC3.3V
R11
10k
VCC3.3V
R12
10k
USB_HUB_P
USB_HUB_N
R9
2.7k
GND
C6
0.1uF 50V
GND
C2
30pF 50V
G1
X503212MSB2GI
C3
30pF 50V
GND
GND
USB_4_D-
USB_4_D+
USB_4_N
USB_4_P
USB_3_D-
USB_3_D+
USB_3_N
USB_3_P
USB_2_D-
USB_2_D+
USB_2_N
USB_2_P
USB_1_D-
USB_1_D+
USB_1_N
USB_1_P
D3
Green
LED_1
R5
300
D4
Green
DRV
D5
Red
R13
300
GND